RAISING LAMBS ON MILK REPLACER

Yves M. Berger and Richard A. Schlapper
Spooner Agricultural Research Station
University of Wisconsin-Madison

Introduction

It is well known that the number of lambs born per ewe per lambing is the most important trait for the profitability of a sheep enterprise. Producers should approach a 200% lamb crop. Quite a few producers, using highly prolific breeds (e.g. Finn, Romanov) in a crossbreeding system, achieve and even surpass this percentage. At the Spooner Agricultural Research Station, the level of prolificacy was quite high, reaching 300% in adult Romanov x Targhee ewes lambing in March-April. This high level of prolificacy implies that single lambs are an exception, and triplet and quadruplet lambs are the rule. Although quite a few ewes are able to raise three lambs (some even raise four), many can raise only two. Without a doubt, severe culling of ewes with poor to fair milk production would result in an increase of the number of ewes able to raise triplet lambs. However, selection is a slow process, and inevitably producers using highly prolific breeds will have extra lambs that will have to be raised artificially. Moreover, with the new dairy sheep industry, artificial rearing of lambs might be a viable option to obtain more milk (see Brett McKusick's article, page _____) from the ewes.

Many people are reluctant to raise lambs on milk replacer (thus reluctant to use prolific breeds) for several reasons: increased work load, lambs may do poorly, high mortality rate, and it may not be economical. We find none of those reasons to be valid, and we would like to share with you the system we use to successfully raise lambs on milk replacer.

Materials Needed

Lambs should feed themselves on a free-choice basis to minimize labor and maximize the amount of milk consumed, which promotes maximum growth. We use the "lamb bar" system consisting of rubber nipples connected to the source of milk by plastic tubing. The mixed milk replacer is put in containers inside a regular cooler. The amount of material needed to successfully artificially raise lambs will depend on the number of lambs the producer is planning to raise. However, the best is to keep it as simple as possible.

For approximately 100 lambs, we use:

- Two or three used plastic baby bottles and used nipples in which the hole has been slightly enlarged. It is not necessary to purchase fancy bottles and fancy nipples.
- One heat lamp.
- Three coolers (one 20 quart, two 55 quarts).
- One cake pan (13" x 12" x 2").
- One plastic dishpan (14" x 12" x 5").
- Two 2-gallon plastic pails.

- One dozen nipples (lamb bar). We do not use nipples with a valve system.
- Clear plastic tubing (outside diameter) to convey the milk for the source to the nipple. The tube is cut to desired length.
- Three panels of 4' x 3' to which a sheet of tin is attached. The tin is perforated with four holes (9/16") to receive the nipples.
- Enough panels to build four pens.
- Cleaning equipment: brush, bottle brush, tube brushes.
- Several deep-freeze plastic containers to store frozen colostrum.

This is all the material needed. As one can see, it is not much of an investment.

Products Used

Colostrum: Cow colostrum is frozen in 16-oz. plastic containers and thawed when needed.

Milk Replacer: Only high quality lamb milk replacer should be used. Some people might have some relative success with a few lambs using goat milk or cow milk. These milks cannot be used on a large number of lambs. The fat content of sheep milk is much higher than cow's or goat's milk, and the lactose content is lower. Remember that modern lamb milk replacer is made to meet the lambs' requirements exactly. By using milk replacers according to the label, it is very rare to see scours in young lambs, not even dirty rear-ends. Moreover, modern lamb milk replacers are extremely easy to mix and stay in suspension for long periods of time.

In our system, milk powder is mixed with water (one part dry powder to two parts water) by hand mixing or hand beater. Since we mix milk several times during the day, we never mix more than four to six gallons at a time.

Starter Feed: A starter feed (19% CP) is provided to the lambs at a very early age. The starter feed used at the Spooner Research Station has the following composition:

Rol

led shelled corn

47.

8%

Rolled oats	12.5%
Premix with Bovatec	16.5%
Soybean meal	17.2%
Molasses	5.0%
Sheep mineral	.5%
Ammonium Chloride	.5%
	100%

Set Up

Four pens are set up: a small pen in which newborns are trained to the baby bottle, a slightly bigger pen in which lambs are trained to the lamb bar, an intermediate pen, and a graduate pen (Figure 1). All pens are set up in a heated area, which in the middle of winter stays at 35°F to 40°F. Pens are bedded with straw.

1. Bottle Lamb Pen: When a lamb is designated to be raised on milk replacer, it is placed in a small pen (5' x 4') with a heat lamp in a corner. In this pen, lambs receive an adequate supply of colostrum (at least two feedings) and trained to eat willingly from the baby bottle. Lambs are fed approximately every four hours. This phase lasts between 24 and 48 hours. The time spent by the lamb in this pen depends on its behavior, which varies greatly between individuals. Therefore, the choice of the lamb to be taken away from its mother depends very much on its willingness to suck on a rubber nipple. In this pen, a heat lamp is provided for the comfort of the newborn lambs.

2. First Lamb Bar Pen: As soon as the lamb takes the bottle greedily, it is put in a slightly bigger pen (6' x 4') in which a lamb bar has been set up using the smaller cooler, the cake pan, two tubes, and two nipples. No more than seven or eight lambs are put at the same time in this pen. The cake pan is placed inside the cooler resting in a block put in the bottom of the cooler. This keeps the level of milk high enough for lambs to receive the milk without sucking very hard. Warm milk is put in the cake pan. In wintertime, the milk is kept warm by placing a jug full of hot water in the bottom of the cooler. In this pen, lambs are trained to find the milk by themselves. The first two or three feedings, lambs are brought to the nipple and held until the milk comes. It helps to let the lambs get slightly hungry before the first feeding. Some lambs understand the principle of the surrogate mother right away; others are a little bit more reluctant, but all can feed themselves adequately in 48 hours. It is important to observe the lambs from a distance and take note of the ones eating well by themselves. Those lambs can be put in the intermediate pen.

3. Intermediate Pen: This pen is much bigger (12' x 5'), where 15 lambs can be put together. A four-nipple lamb bar is set up with a bigger cooler. A plastic dishpan (14" x 12" x 5") filled with warm milk is placed inside the cooler, again raised on a block to keep the level of milk high enough for easier sucking. At this point, no jug of hot water is placed in the cooler. It does not matter if the milk is allowed to cool. Lambs are advanced to the graduate pen when they are doing well in this pen.

4. Graduate Pen: A much larger pen (12' x 15') where up to 30 lambs are together. A four-nipple lamb bar is set up. The cooler is big enough to hold two 2-gallon plastic pails filled with cold milk. Lambs do very well on cold milk and it keeps them from eating too much at one time. In this pen, a starter feed is put at the disposition of the lambs. At this stage, lambs are no longer a source of intense work. It is enough to bring them fresh milk at regular intervals and watch them grow**. LAMBS ARE VACCINATED WITH C, D & T AS SOON AS THEY ARE 10 DAYS OLD.**

Daily Routine

1. In the early morning, the person in charge of the lambs starts the day by completely dismantling all the lamb bars and washing all elements thoroughly with detergent, brushes,

and hot water. It is our theory that since we are dealing with dairy products, cleanliness is the most important factor in keeping the lambs healthy.
2. Lamb bars are set up again. Fresh milk is mixed (warm or cold, according to pen).
3. Fresh bedding is put in all pens. Feed is put in pen four. Some lambs move from pens three to four.
4. Lambs in pen one are fed milk in the bottles. Some of the lambs will move to pen two.
5. Lambs in pen two are trained at the lamb bar. Some lambs are moved to pen three.
6. New lambs are put in pen one. The choice of those lambs is mostly based on the behavior of the lambs. Priorities are given to lambs that willingly drink from a bottle. However, efforts are made to keep lambs of the same size with the mother.
7. During the day, the levels of milk in the coolers are checked regularly and more milk is mixed when needed.

Weaning

Lambs are weaned abruptly anywhere from 17 to 45 days with an average of 28.9 days. Small lambs are always weaned at an older age that regular lambs. As a rule of thumb, lambs are weaned when they are close to three times their birth weight.

Our average of 28.9 days for age at weaning is fairly high, although many lambs were weaned at a much younger age.

Age in days	% of lambs
15 to 19 days	1.7%
20 to 24 days	20.5%
25 to 29 days	38.7%
30 to 34 days	22.4%
35 to 39 days	8.7%
40 to 50 days	7.9%

As a rule, the smaller the lamb is at birth, the older it is at weaning. At weaning, lambs are removed from the nursery area. They are put in a pen as far away as possible from sensitive ears. For the next two or three days, lambs will bleat ferociously and lose some of their bloom. But soon the amount of feed consumed increases rapidly and a very decent growth rate is achieved. For the next few weeks, a high protein ration is essential.

The first lambs of the season are always the most difficult to wean since no experienced lambs are around to share their expertise. Thereafter, lambs that are added to the already weaned group, wean easier and with less stress.

Performance of Lambs Raised on Milk Replacer

Between 1989 and 1998, a total of 903 lambs were raised on milk replacer. All information pertaining to these lambs are presented in the following two tables. Table 1 gives the performance of lambs according to the year of lambing, the type of birth, and sex. Since the Spooner Research Station deals with many different genotypes of lambs, Table 2 gives the same type of data according to the breeds of sire of the lambs.

Both tables reflect very good performances of lambs raised on milk replacer. Mortality before weaning is low (1.9%) and growth between birth and weaning is good to excellent. Very small lambs at birth (2.8 to 5 lbs) do not do quite as well and it takes longer to wean them. However, all lambs do quite well after weaning with a gain of .7 lbs/day.

There are no large differences between breeds of lambs. Texel sired lambs and _ or f Romanov lambs have a slightly poorer weight to weaning than other lambs.

Economics of Raising Lambs on Milk Replacer

The apparent high cost of raising lambs on milk replacer is the main reason of the reluctance of sheep producers to use highly prolific breeds of sheep. Let's try to see what the costs really are:

Milk Replacer: For the 903 lambs raised on milk replacer between 1989 and 1998, an average of 18 lbs of milk powder was used per lamb. The average price per pound was $1.14. Therefore, the cost of milk used per lamb was $20.50.

Time Spent: We consider that during the first three days, one lamb gets approximately 10 minutes of personal attention per day. Thereafter, the time spent per lamb up to weaning is very minimal, consisting mainly of cleaning equipment, making milk, and giving creep feed.

First three days.....10 min/day
Remaining 25 days .....2 min/day
Total ..... 1 hr. and 20 min.
x $8/hr.=$10.60

Investment: At total of $150 has been invested in equipment (coolers, pails, etc.). After 10 years of use, the coolers are still suitable for further use. The total cost of investment per lamb is $.15.

Supplies: A few supplies are needed, such as:

Nipples, 10/year @ $1.10 .....$.10/lamb
Brushes.....$.12/lamb
Detergent.....$.12/lamb

<u>Feed Cost after Weaning</u>: In our system, lambs after weaning are kept in confinement and fed a high-energy grain diet with no forage. If all elements of the ration were purchased, the cost of the ration provided to the lambs is $180/ton for the starter ration and $140/ton for the finishing ration. Lambs are kept on starter ration until they reach 50 lbs and then are switched to the finishing ration. They are sold at an average weight of 114 lbs.

Consumption of starter ration	**130 lbs @ $.09**	**$11.70**
Consumption of finishing ration	300 lbs @ $.07	$21.00
Total feed cost		$32.70

<u>Cost of Dead Lambs Between Weaning and 114 lbs</u>.: Out of 903 lambs raised to weaning, only 886 were sold. Those lambs cost roughly $20. The total cost of the dead lambs should be added to the cost of the live lambs, i.e. $.38 per lamb.

<u>Summary of Costs</u>:

Milk Replacer	**$20.50**
Labor	$10.60
Investment	$.15
Supplies	$.34
Feed cost from weaning to 114 lbs.	$32.70
Cost of dead lambs	**$.38**
Total Cost	$64.67

Therefore, the total cost of raising lambs on milk replacer in 1998 from birth to 114 lbs is $64.67. What are the profits made by raising lambs according to the sale price?

Sale Price ($/cwt. live)	60.00	65.00	70.00	75.00	80.00	85.00
Profit ($/head)	3.73	9.43	14.23	20.83	26.53	32.23

The price of lambs has to be at least $65/cwt for lambs raised on milk replacer to become profitable. At today's prices of $75-$85/cwt, successfully raising lambs on milk replacer can tremendously increase the net return per ewe.

Figure 1. Set Up and Material

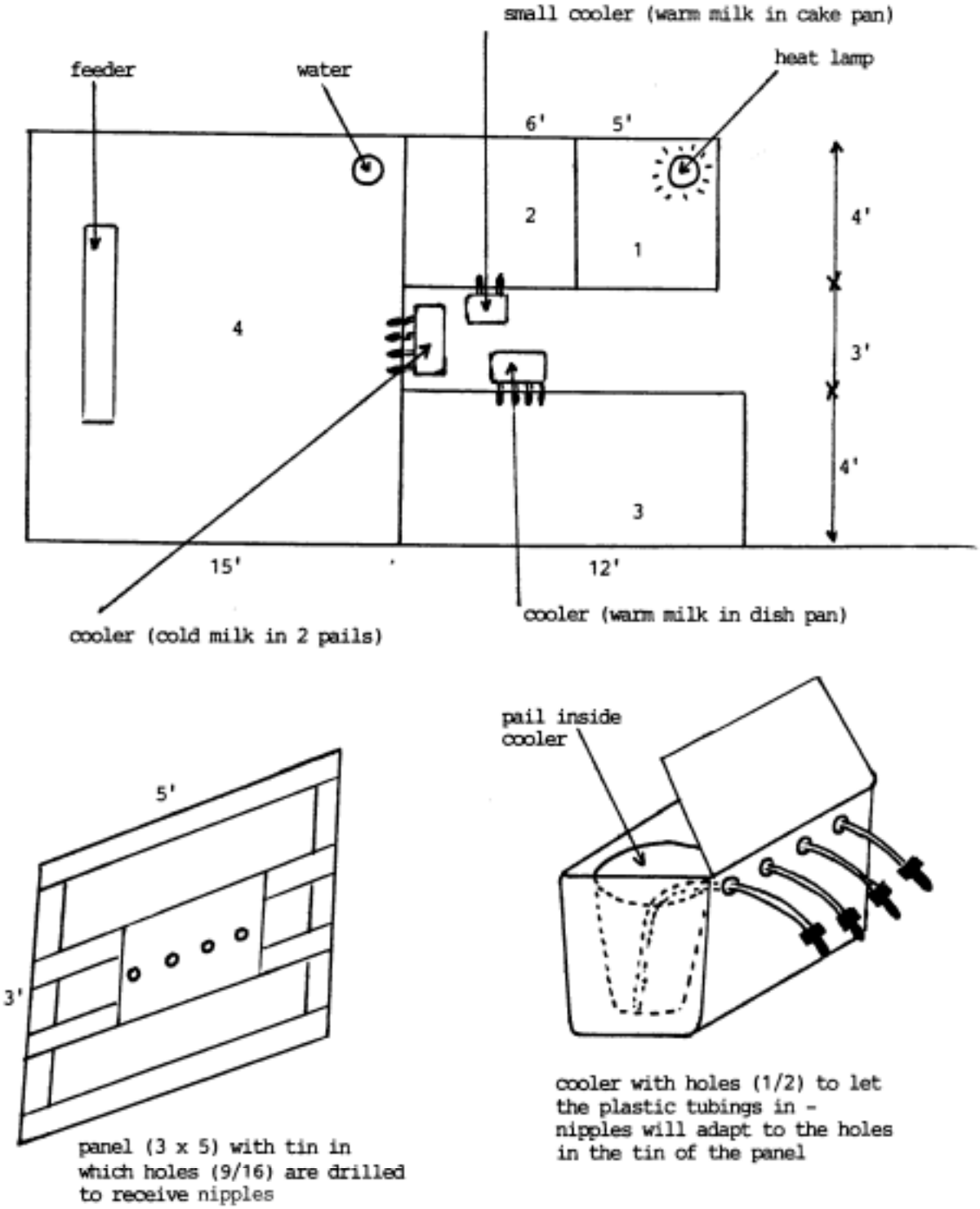

Table 1. Performance of lambs raised on milk replacer according to the year of birth, type of birth, and sex

	No.	Birth wt. (lbs)	Wean wt. (lbs)	Wean age (days)	ADG birth to wean	ADG wean to sale	Mortality before weaning
All lambs	**903**	8.5	24.1	28.9	.55	.72	17
Year							
1989	42	9.5	26.8	30.4	.58	---	0
1990	79	7.5	23.9	30.7	.57	.74	1
1991	88	7.3	23.8	29.6	.59	.75	0
1992	87	7.8	22.9	30.1	.52	.66	1
1993	129	8.0	21.4	28.8	.50	.67	2
1994	119	7.6	19.0	31.4	.38	.70	7
1995	68	7.4	20.9	33.5	.41	.72	3
1996	72	8.2	23.2	32.3	.47	.68	1
1997	67	7.9	25.7	31.4	.59	.78	1
1998	152	8.6	25.8	29.3	.63	*.68	1
Type of birth							
1	28	11.8	27.5	25.1	.64	.77	0
2	207	9.7	25.9	28.8	.58	.72	5
3	473	8.4	24.1	29.1	.55	.72	6
4	170	7.6	23.5	30.1	.54	.72	6
5	16	6.8	21.8	32.7	.48	.70	0
6	5	5.3	20.0	36.3	.43	.64	0
7	4	6.2	20.4	33.0	.44	.70	0
Sex							
M	462	8.3	24.0	30.3	.54	.79	10
F	441	7.6	22.6	31.2	.50	.63	7

*partial results

Table 2. Performance of lambs raised on milk replacer according to genotype

	No.	Birth wt. (lbs)	Wean wt. (lbs)	Wean age (days)	ADG birth to wean	ADG wean to sale	Mortality before weaning
All lambs	903	8.5	24.1	28.9	.55	.72	17
Breed of sires							
Hampshire	272	8.2	23.5	28.4	.55	.73	7
Dorset	140	7.3	22.6	30.1	.51	.70	3
Finnsheep	39	9.5	26.1	26.2	.64	.73	0
Romanov	57	8.0	21.9	28.3	.50	.66	0
Targhee	33	11.2	27.6	27.4	.61	.71	0
Texel	152	9.4	25.5	28.7	.59	.63	4
East Friesian Cross	210	8.8	24.6	29.7	.55	.79	3